PLAN COFRAJ FUNDATIE
FORMWORK FOUNDATION PLAN

Plan fundatie stalp iluminat
Plan lighting pole foundation
1:20

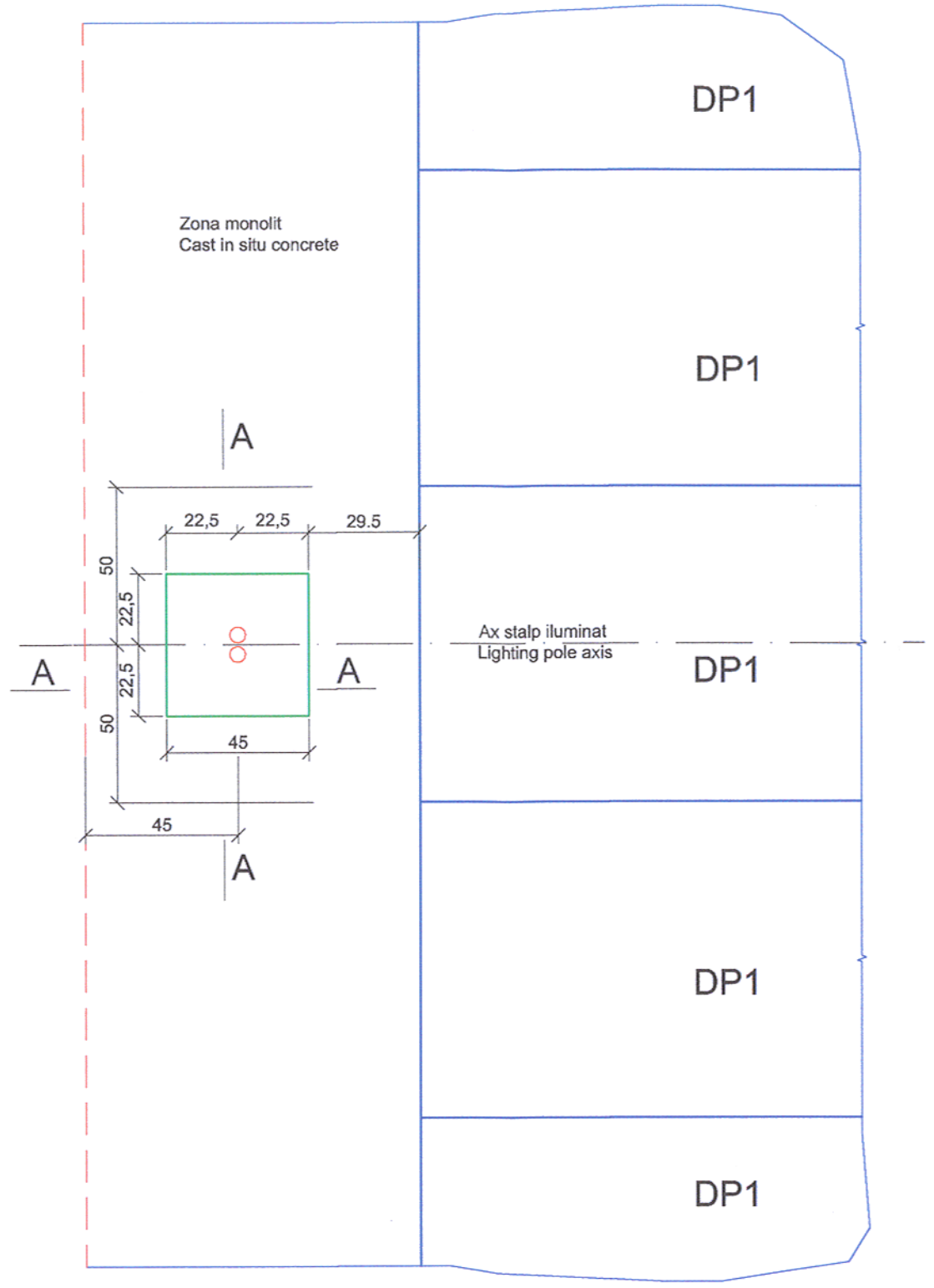

SECTIUNE / SECTION A-A
SCARA / SCALE 1:20

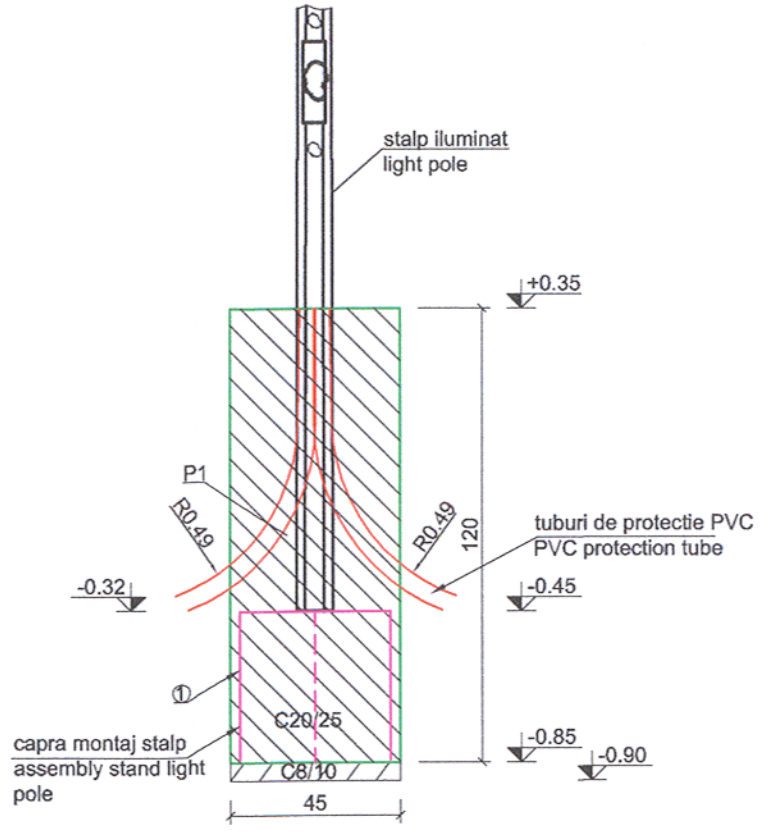

①Ø10 Bst500 (2 buc.) L=1.60 m

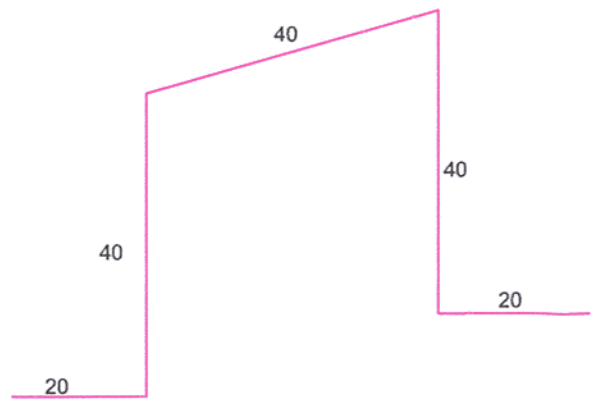

EXTRAS DE ARMATURA
EXTRACT OF REINFORCEMENT

Marca/ Mark	Diametrul/ Diameter (mm)	Buc/ Pieces	Lungime (m) Lenght (m)	Lungimi pe diametru/ Lenghts by diameters
				Bst500 (S500)
				ϕ10
1	10	2	1.60	3.2
Lungime totala pe diametre / Total length on diameter				3.2
Masa pe metru /Mass on meter (kg/ml)				0.616
Masa pe diametre / Mass on diameter (kg)				2.0
Masa toala pe tip de otel / Total mass on steel type (kg)				2
TOTAL (kg)				2

1. Sistemul de protectie anticoroziva va fi de tip alchidic.
2. Grundul se va asterne pe suprafata receptionata, conform Caietului de Sarcini, in doua straturi, masurand 30-40mm.
3. Stratul intermediar de vopsea va masura 50-60mm grosime.
4. Stratul de finisare va masura 70-85mm grosime.
5. Masurarea grosimilor straturilor uscate se va face cu elcometrul.
6. Ultima masuratoare va trebui sa evidentieze o grosime cuprinsa intre 150-185mm.

1. The adopted anticorosive protection is an alkyd system.
2. The primer will laid on surfaces prepared according too the Technical Specifications in 30-40mm thickness.
3. The intermediary layer will be 50-60mm thickness.
4. The finishing layer will be 70-85mm thickness.
5. The measurement of the dried layer thickness will be made with the elcometer.
6. The result of the last measurement must be between 150-185mm thickness.

NOTA / NOTE:
Toate tipurile de otel (in special Bst 500) vor avea obligatoriu clasa de ductilitate C.
All types of steel (especially Bst 500) will mandatory have the ductility class C.

CLASA DE IMPORTANTA A CONSTRUCTIEI CONFORM P100/1-2006 ESTE III; CATEGORIA DE IMPORTANTA CONFORM H.G. NR. 766/97 ESTE "C".

THE CONSTRUCTION IMPORTANCE CLASS, ACCORDING TO P100/1-2006, IS III; CATEGORY, ACCORDING TO H.G. 766/97 IS "C".

MATERIALE:
Beton armat C20/25 CEM II/A-S 42.5 N; sort 0-16; A/C : 0.55 ;
Beton armat de monolitizare C30/37 CEM II/A-S 42.5 N ; sort 0-16; A/C : 0.55 ;
Beton egalizare C8/10(5 cm)
Otel beton Bst500

MATERIALS:
Reinforced concrete C20/25 CEM II/A-S42.5 N ; sort 0-16 A/C : 0.55 ;
Reinforced concrete C30/37 CEM II/A-S42.5 N ; sort 0-16 A/C : 0.55 ;
Equalization concret C8/10(5 cm)
Reinforcement Bst500

Proiectul de structura se va corela cu proiectul celorlalte specialitati (partea scrisa si partea desenata).
The structural project (blueprints, tehnical briefs, technic specifications) will be corelated with the other specialitis'projects (blueprints, tehnical briefs and technical specifications).

Nota:
1. Fundatiile se vor realiza inainte de turnarea monolitizarii peroanelor.
2. Diametrul stalpului este informativ(se vor consultata fisele tehnice ale producatorului) ,se va respecata ingroparea de minim 600 mm indiferent de modelul ales.
3. Inainte de montaj se caleaza si se sutine pana se toarna betonul.
4. Se va consulta impreuna cu proiectul de instalatii electrice.
5. Armatura marca③ o sa se pozitioneze pe mijlocul gaurii de fundare.

Note:
1. The foundations will be realized before platforms casting-in place.
2. The pole diameter is given only for information (the manufacturer technical sheets will be consulted), but the minimum 700mm embedding will be respected no matter the selected model.
3. Before montage, it is fit on and supported until the concrete is cast on place.
4. It will be consulted with the electric installations project.
5. Armature type③ will be placed on the middle of the foundation hole.

Nota generala valabila pentru intregul proiect:

Executantul este obligat sa verifice informatiile din planuri si din extrasele de materiale inainte de comandarea oricaror materiale si sa comunice orice neconcordanta proiectantului. In caz contrar proiectantul nu isi va asuma responsabilitatea pentru nici o eroare din planuri sau din extrasele de materiale.

Universal remark valid for the entire project:

The executants is bound to verify all the information from the plans and from the material lists before ordering any materials and to communicate any disparity to the designer. Other way the designer will not assume the responsibility about the errors in the plans or in the material lists.

Acest plan anuleaza si inlocuieste planul nr. PT.02.04.17.2.RE.01.005 elaborat la data 01.2013.

This layout plan canceled and replaced layout plan no. PT.02.04.17.2.RE.01.005 prepared on 01.2013.

Verificator / Expert Checker / Expert	Cerința Requirement	Semnătura Signature	Referat / Expertiză Report / Expertise

European Investment Bank

MINISTERUL TRANSPORTURILOR

BENEFICIAR / BENEFICIARY :
COMPANIA NAȚIONALĂ DE CĂI FERATE "CFR" SA

PROIECTANT / DESIGNER: PÖYRY

			Data Date	Semnătura Signature
Aprobat Approved	Șef de echipă Team leader	C. Teodorescu	01.2013	
Verificat Checked	Expert Cheie Key Expert	R. Witan	01.2013	

Subcontractant / Subcontractor: VIOTOP

Aprobat Approved	Adjunct Șef de echipă Deputy Team leader	A.M. Baicu	01.2013	
Proiectat Designed	Inginer Engineer	D.Oprescu	01.2013	

"Reabilitarea liniei c.f. Frontier ă - Curtici - Simeria , parte componentă a coridorului IV Pan - European pentru circula ția trenurilor cu viteză maximă de 160 km/h"
Tronsonul 2 - C: Cap Y Ileu - Cap Y Gurasada
"Rehabilitation of the Railway Line Border - Curtici - Simeria , component Part of the IV Pan - European Corridor for the Trains Circulation with maximum speed of 160 km/h"
Section 2 - C: End Y Ilteu - End Y Gurasada

Project 9i 35311.1

Faza / Phase: PTh+CS / TD+TS

Denumire desen / Drawing name:
P.O. Tisa. Peroane. Plan fundație st âlp iluminat
S.P. Tisa. Platforms. Lighting pole fundation plan

Scara / Scale	Revizia / Revision	Cod desen / Drawing Code	Nr / No
1:20	1/05.2013	PT.2C.04.17.2.RE.01.005	05/06